Large Air Motors

These large motors are designed for use in the most arduous applications, requiring considerable power, torque, robustness and reliability

Note: All air motors can be operated oil-free without special adaptation with only a 20% reduction of power.

Operating information

Working pressure:	Max 7 bar
Temperature range:	-30°C to +100°C
Medium	Filtered dry air and oil mist, purity class ISO 8573-1 class 3.-.5 for indoor use and with a dew point lower than ambient temperature for outdoor use

For more information see www.parker.com/euro_pneumatic

Data for reversible air motor

Max power kW	Free speed rpm	Speed at max power rpm	Torque at at max power Nm	Min start torque Nm	Air consumption at max power m^3/min	Conn.	Min pipe ID mm	Weight Kg	Order code
5,1	6000	3000	16.2	24.4	6.2	G1	25	27	**P1V-B510A0600**
9	6000	3000	28.6	43	10	G1	25	25	**P1V-B900A0600**
18	6000	3000	57	85	20	G2	43	54	**P1V-BJ00A0600**

Technical data:

Working pressure	Max 7 bar
Working temperature	-30 °C to +100 °C
Medium	Filtered dry air and oil mist, purity class ISO 8573-1 class 3.-.5 for indoor use and with a dew point lower than ambient temperature for outdoor use.

Air motor size	**P1V-B510**	**P1V-B900**	**P1V-BJ00**
Nominal power (kW)	5.1	9	18
Working pressure (bar)		3 to 7	
Working temperature (°C)		-30 to +100	
Air flow required (Nl/min)	6200	10000	20000
Min pipe ID, inlet (mm)	25	25	43
Min pipe ID, outlet (mm)	25	25	43
Medium		40µm filtered, oil mist or dry unlubricated compressed air	
Oil free operation, indoor		ISO8573-1 purity class 3.4.1	
Oil free operation, outdoor		ISO8573-1 purity class 1.2.1	
Oil operation		1-2 drop per cube meter, ISO8573-1 purity class 3.-.5	
Recommended oil		Foodstuffs industry Klüberoil 4 UH 1-32	
Shaft radial force (N)	7500	7500	7500
Shaft axial force (N)	11000	11000	11000

Material specification

Motor housing	Painted steel
Output shaft	Hardened steel

Note: All technical data is based on a working pressure of 6 bar.

P1V-B510A0060

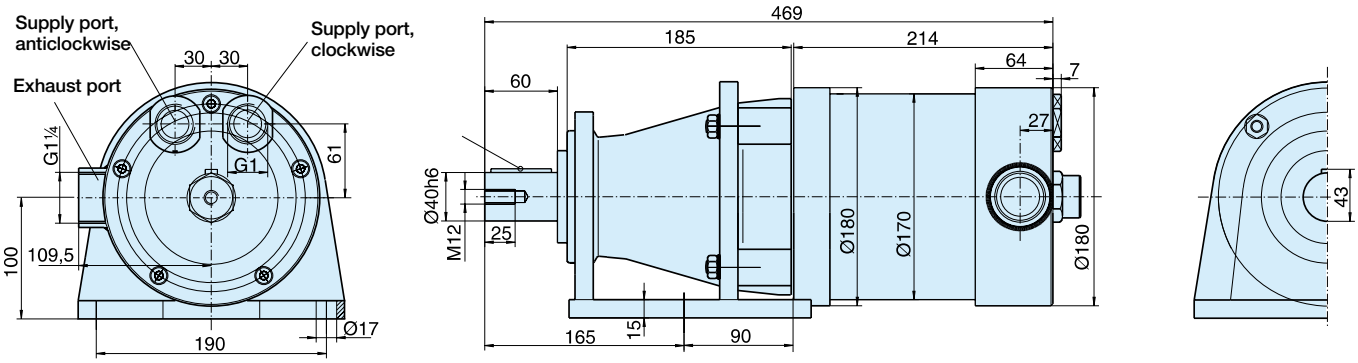

P1V-B900B0160
P1V-B900B0080

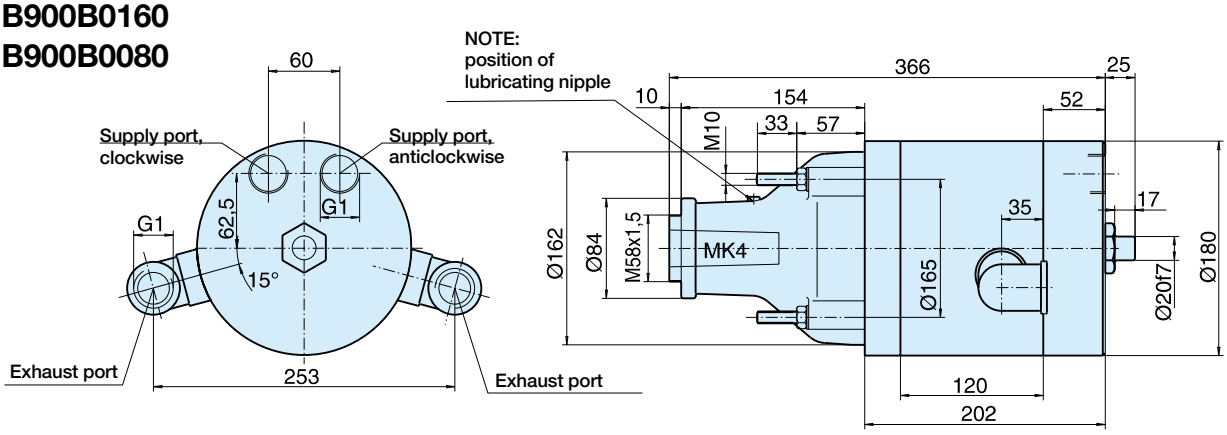
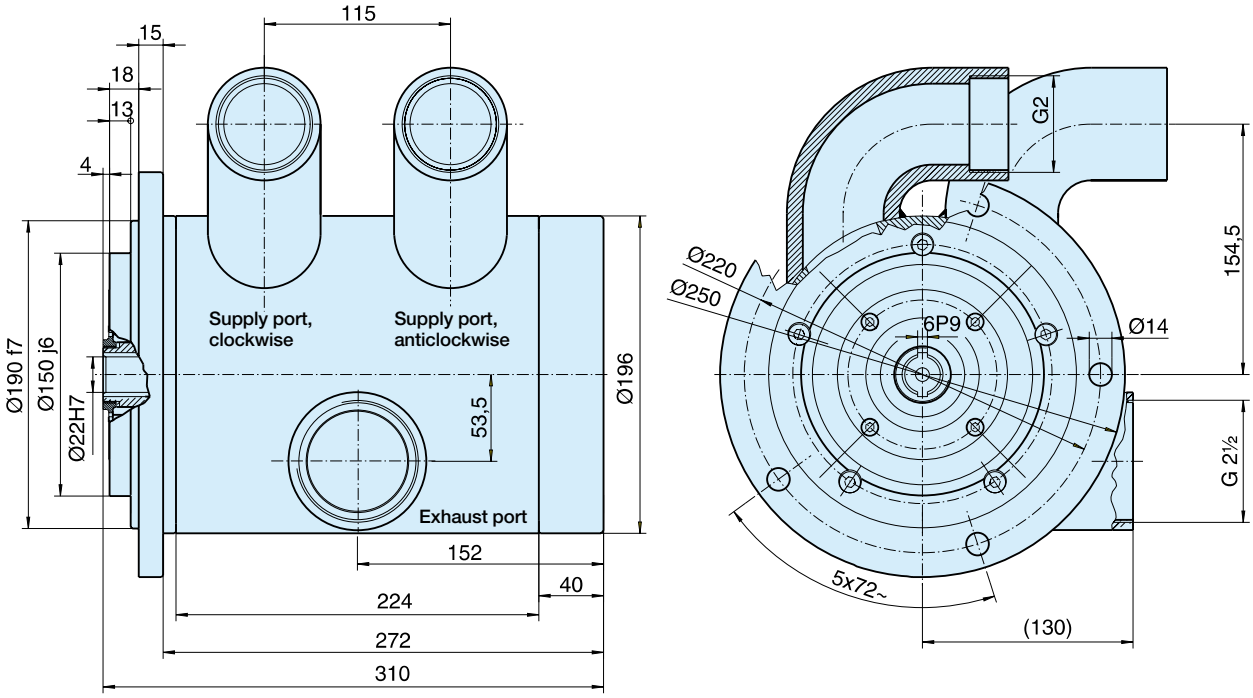
P1V-BJ00C0600